REVISIONS				
ZONE	REV.	DESCRIPTION	DATE	APPROVED
	-	PROTOTYPE	10/09/2018	
	A	REVISED HOUSING, ADDED MOT LASER SKETCH	10/10/2018	
	B	REVERSED THREAD SHOULDER LOCATION AND CHANGED THREAD DIAMETER	10/16/2018	

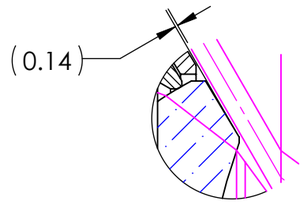

DETAIL A
SCALE 3 : 1

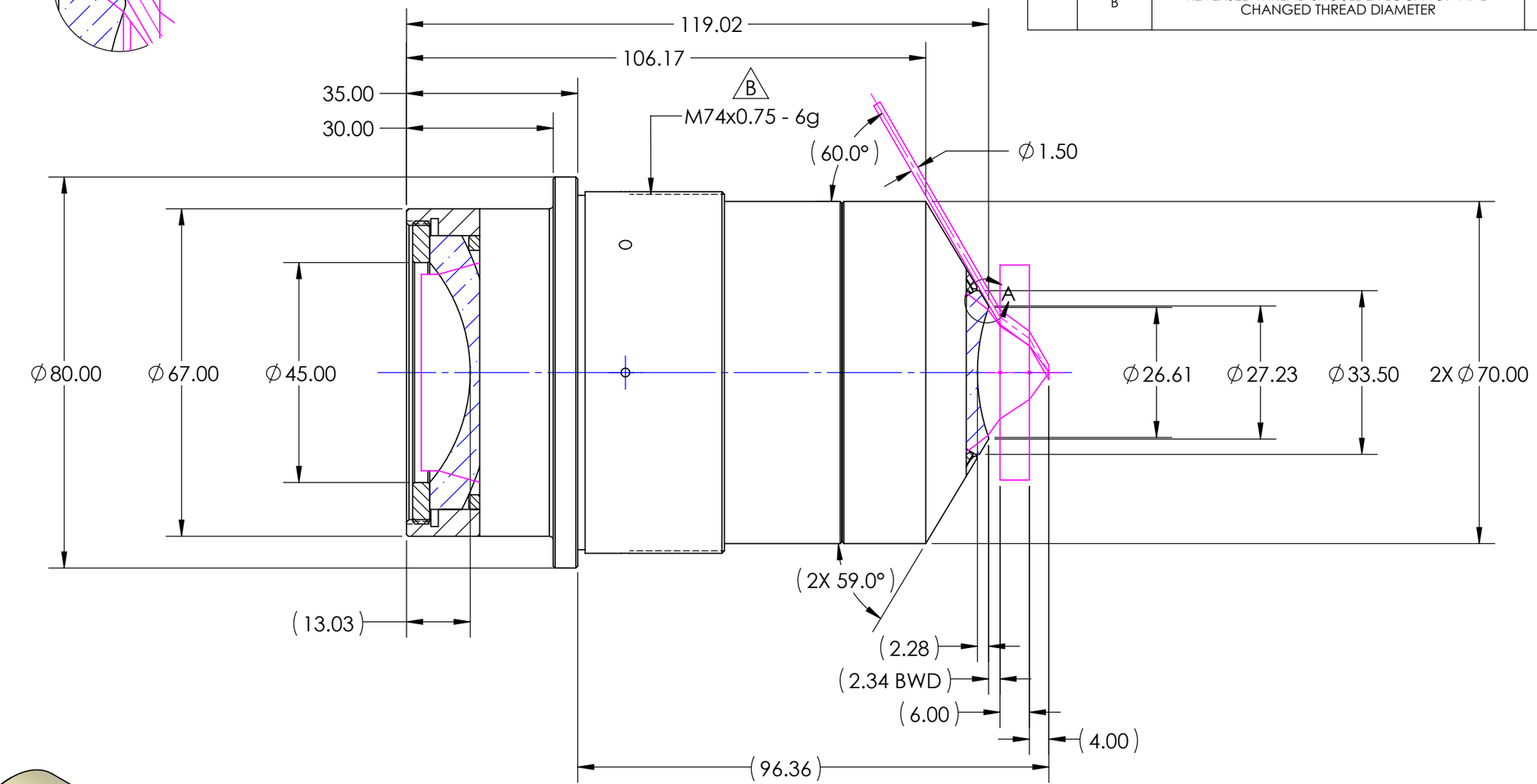

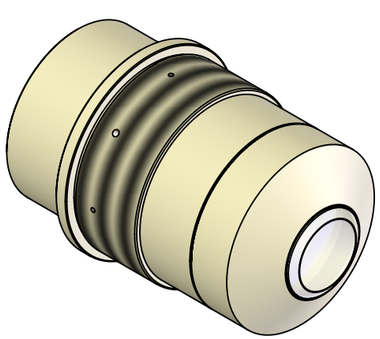

INTERPRET GEOMETRIC TOLERANCING PER:LATEST ANSI Y14.5 SPEC.

PROPRIETARY AND CONFIDENTIAL

THE INFORMATION CONTAINED IN THIS DRAWING IS THE SOLE PROPERTY OF SPECIAL OPTICS. ANY REPRODUCTION IN PART OR AS A WHOLE WITHOUT THE WRITTEN PERMISSION OF SPECIAL OPTICS IS PROHIBITED.

UNLESS OTHERWISE SPECIFIED:

DIMENSIONS ARE IN mm
TOLERANCES:
LINEAR X=±.5 .X=±.25 .XX=± .13
ANGULAR: X°=±.25° .X°= ±.05° .XX°=.005°

	NAME	DATE
DRAWN	CJR	10/9/2018
CHECKED	XXX	XXX
ENG APPR.		
MFG APPR.		
Q.A.		

THIRD ANGLE PROJECTION

MATERIAL: ULTEM 2300 PEI-30

FINISH: NATURAL

DO NOT SCALE DRAWING

XXX	
NEXT ASSY	USED ON
APPLICATION	

XXX

SPECIAL OPTICS®
A NAVITAR COMPANY
Special Optics Inc.
3 Stewart Court
Denville, NJ 07834

TITLE:
ASSEMBLY
54-41-25 @ 456, 532, 780, & 852nm

SIZE	DWG. NO.	REV
B	1-28897	B

SCALE:1:1 | WEIGHT:868.57 | SHEET 1 OF 1